Problem 1 The action of the roll clamp is controlled by the two hydraulic cylinders shown. In order to hold firmly the paper roll, a vertical 1000-lb force is applied at the top of the roll by arm *CAF*. Knowing that the weight of the paper roll is 4500 lb, determine the force exerted by each cylinder, and the force exerted at *C* on arm *BCEH*

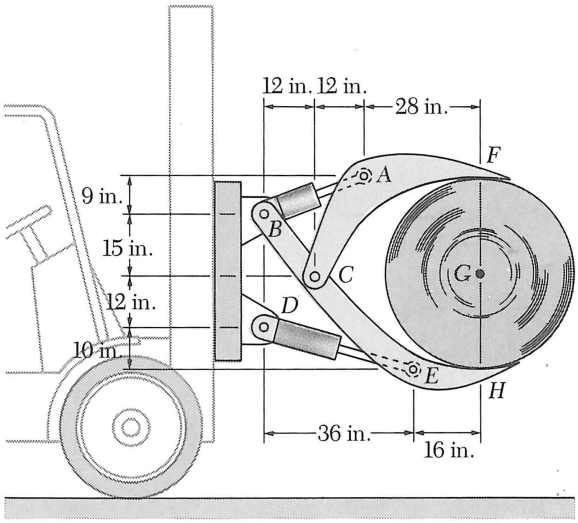

I

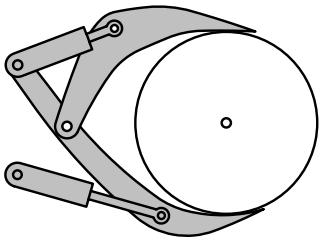

II

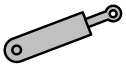

III

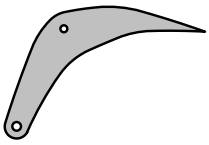

IV

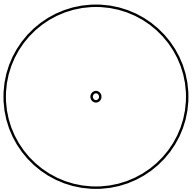

V

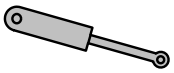

VI

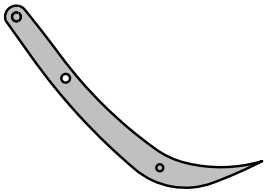

Problem 2 A 48-mm diameter pipe is gripped by the Stilson wrench shown. The upper jaw and portion *DE* of the wrench are rigidly attached to each other, and they are connected to portion *CF* by a pin at *D*. Assuming that no slipping occurs between the pipe and the wrench and no contact occurs at point *E*, determine the components of the forces exerted on the pipe at *A* and *C*.

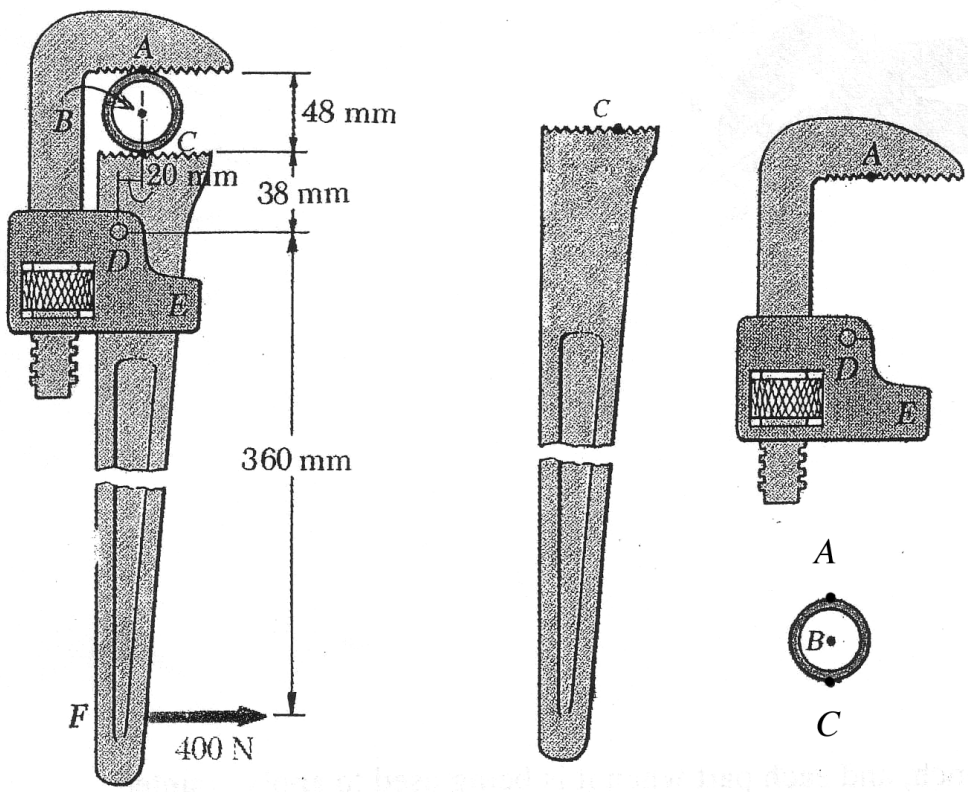

Problem 3 The compound-lever pruning shears shown can be adjusted by placing pin *A* at various ratchet positions on blade *ACE*. Knowing that 300-lb vertical forces are required to complete the pruning of a twig, determine the magnitude *P* of the forces that must be applied to the handle when the shears are adjusted as shown.

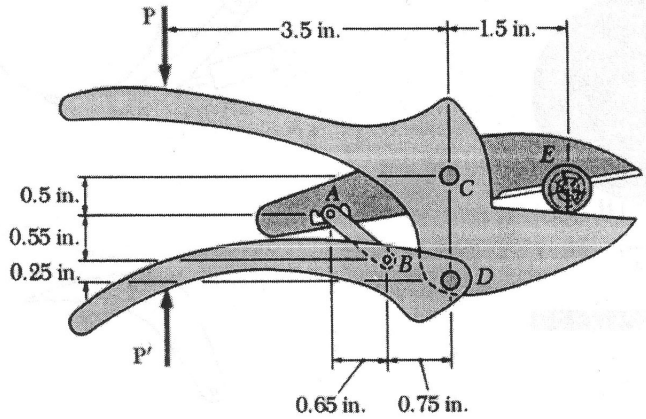

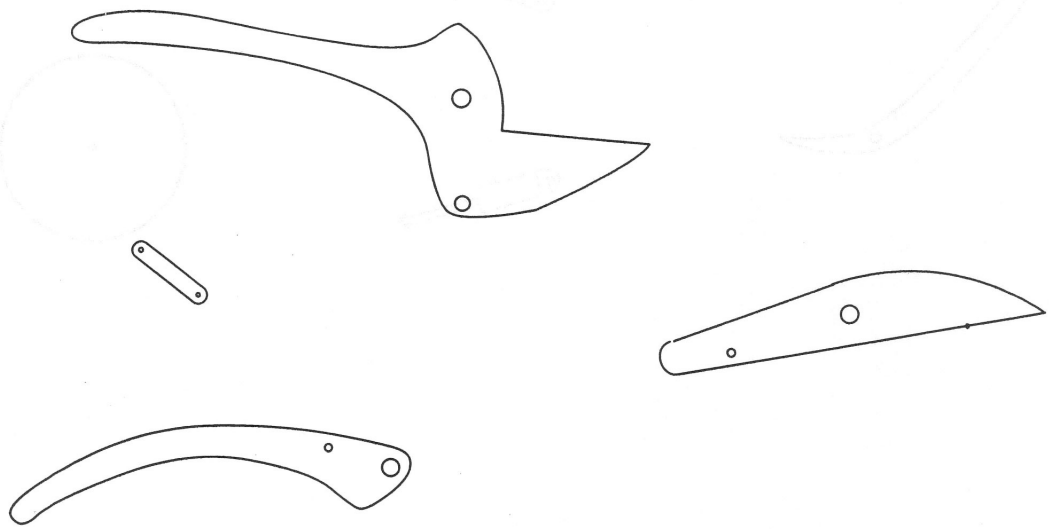

Problem 4 Determine the *x*- and *y*- components of the forces at pins *A*, *C* and *E*, assuming **P** = 15 N and **Q** = 10 N.

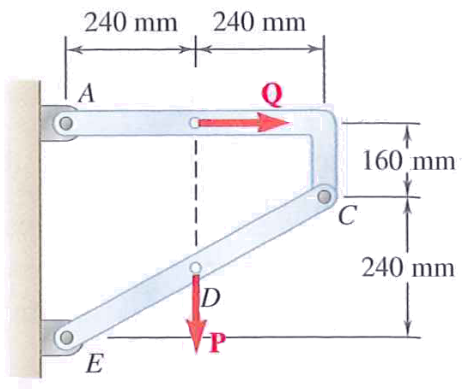

Answers:

Problem 1
F_{AB} = 2190 lb
F_{DE} = 8993 lb
C = 2709 lb @ 40.8°

Problem 2
$A_x = 3.32\,\text{kN} \leftarrow$
$A_y = 14.26\,\text{kN} \downarrow$
$C_x = 3.72\,\text{kN} \rightarrow$
$C_y = 14.26\,\text{kN} \uparrow$

Problem 3
P = 29.4 lb

Problem 4
A_x = 19 N, A_y = 3 N
C_x = 9 N, C_y = 3 N
E_x = 9 N, E_y = 12 N